ASEC

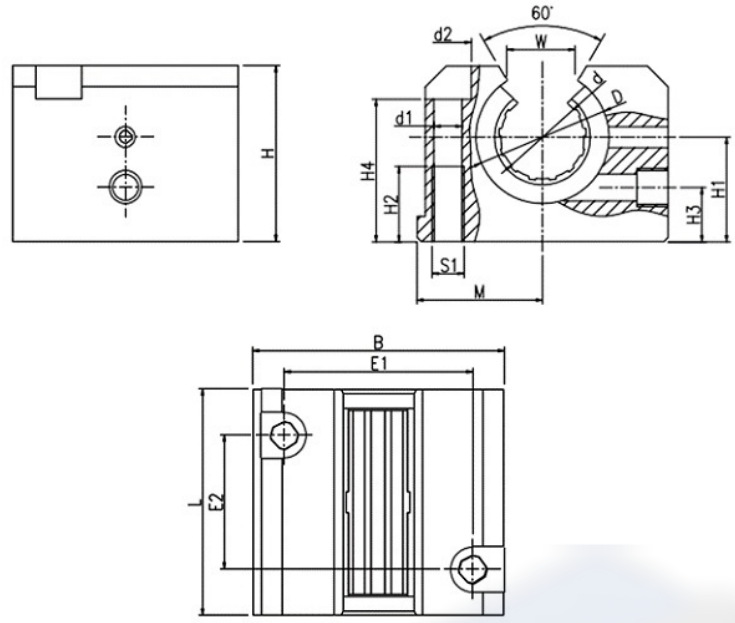

LINEAR SLIDER AS3NLRAK

SKU: AS3NLRAK

ASEC Kunststoffen BV

Marketing 17, 6921 RE Duiven, The Netherlands

T: +31 316 84 44 01 | info@asec.nl

Categories: Units and Sliders

Standard linear bearings consist of a replaceable material sliding film, which is used in conjunction with anodized aluminum or steel shafts. The slide film is axially retained by means of a stop ring groove. the dimensions of ASEC linear plain bearings are identical to those of standard ball bearings: good performance at a significantly lower cost.

AS3NLRAK has an aluminum alloy base with an AS3NLRK bearing, specific for self aligning. Compatible with: AS1NLRK, AS3NLRK.

The information in this datasheet is provided for general purposes only and not meant to be a specific recommendation for any individual application. All values were determined under laboratory conditions. ASEC Products is not directly neither indirectly responsible for any claim resulting from the use of any information provided in this datasheet.
ASEC Products 2022 ©.

ASEC

[table “AS3NLRAK_EN” not found /]

The information in this datasheet is provided for general purposes only and not meant to be a specific recommendation for any individual application. All values were determined under laboratory conditions. ASEC Products is not directly neither indirectly responsible for any claim resulting from the use of any information provided in this datasheet.
ASEC Products 2022 ©.